

Power Beam Hybrid Daylight 18k/12kW Tungsten 24k/20kW

LAMPHEAD CONTENTS

Lamp Housing with

- High Reflective Parabolic Glass Mirror
- Stirrup with Ø28mm Spigot
- Lamphead to EB Cable 15m
- Inlet Cable 15m (Bare End)

Exclude Lamp Bulb
HMI Mode : Requires Electronic Ballast
Tungsten Mode : Requires Electronic Dimmer

Power Beam Hybrid D18T24

SPECIFICATIONS

Identity No.	L1800PBH
Capacity	Daylight : 18,000W / 12,000W
	Tungsten : 24,000W / 20,000W
Voltage	Daylight : 225V / 160V
	Tungsten : 200 - 240V AC
Parabolic Reflector	Ø914mm
Protective Lens	Ø883mm
Lamp Type	HMI 18kW SE / 12kW SE
	Tungsten 24kW SE / 20kW SE
Lamp Base	GX51 / GX38 / G38
Stirrup	Ø28mm (1-1/8 in.) Spigot
Class / IP Rating	1 / IP 23
Max. Surface Temp.	260 °C
Min. Distance to Illuminated Object	22.5m
Min. Distance to Flammable Object	2m
Operating Range	+45° ~ 0° ~ -45°
Weight (lamphead)	96kg

DIMENSIONS (mm)

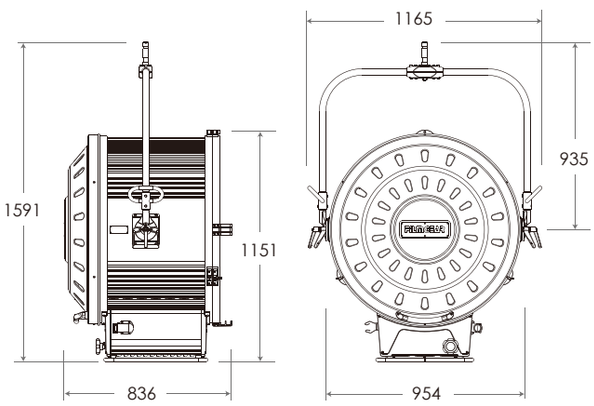

PHOTOMETRIC DATA

DAYLIGHT 18k/12kW

		20m	35m	50m	75m	100m
18kW						
Spot	Lux	181130	59144	28980	12885	7245
	Beam Ø	0.96m	0.96m	0.96m	0.96m	0.96m
Flood	Lux	15935	5203	2550	1125	645
	Beam Ø	5.98m	10.46m	14.95m	22.42m	29.89m
12kW						
Spot	Lux	120753	39430	19320	8590	4830
	Beam Ø	0.96m	0.96m	0.96m	0.96m	0.96m
Flood	Lux	10623	3469	1700	750	430
	Beam Ø	5.98m	10.46m	14.95m	22.42m	29.89m

TUNGSTEN 24k/20kW

		18m	25m	50m	75m	100m
24kW						
Spot	Lux	24916	12918	3230	1435	807
	Beam Ø	1.73m	2.4m	4.8m	7.2m	9.6m
Flood	Lux	7864	4075	1019	453	255
	Beam Ø	5.34m	7.41m	14.82m	22.23m	29.64m
20kW						
Spot	Lux	26380	13675	3419	1519	855
	Beam Ø	1.73m	2.4m	4.8m	7.2m	9.6m
Flood	Lux	6944	3599	900	400	225
	Beam Ø	5.34m	7.41m	14.82m	22.23m	29.64m

ACCESSORIES

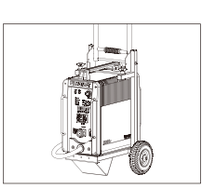
18k/12kW
Electronic Ballast

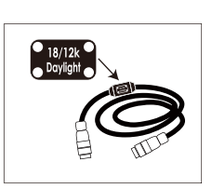

18k/12kW Head to
Ballast Cable

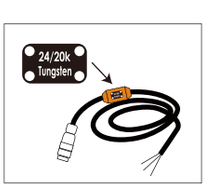

24k/20kW Cable
(Bare End)

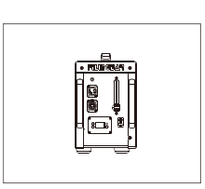
Electronic Dimmer
24kW/12kW DMX

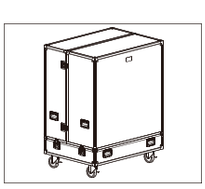
Transport Case

FILM GEAR INT. reserves the right to change or alter any of the items detailed on this page, to increase or improve manufacturing techniques without prior notice. @ 20250113